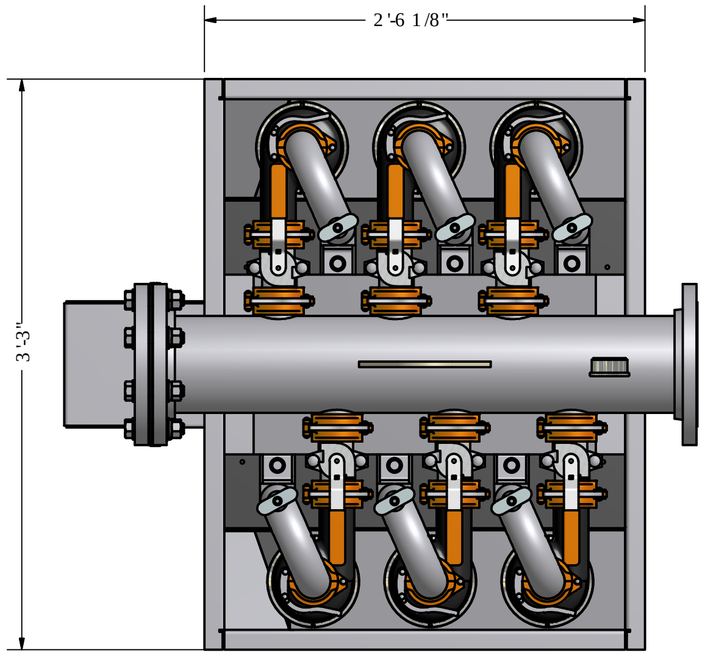

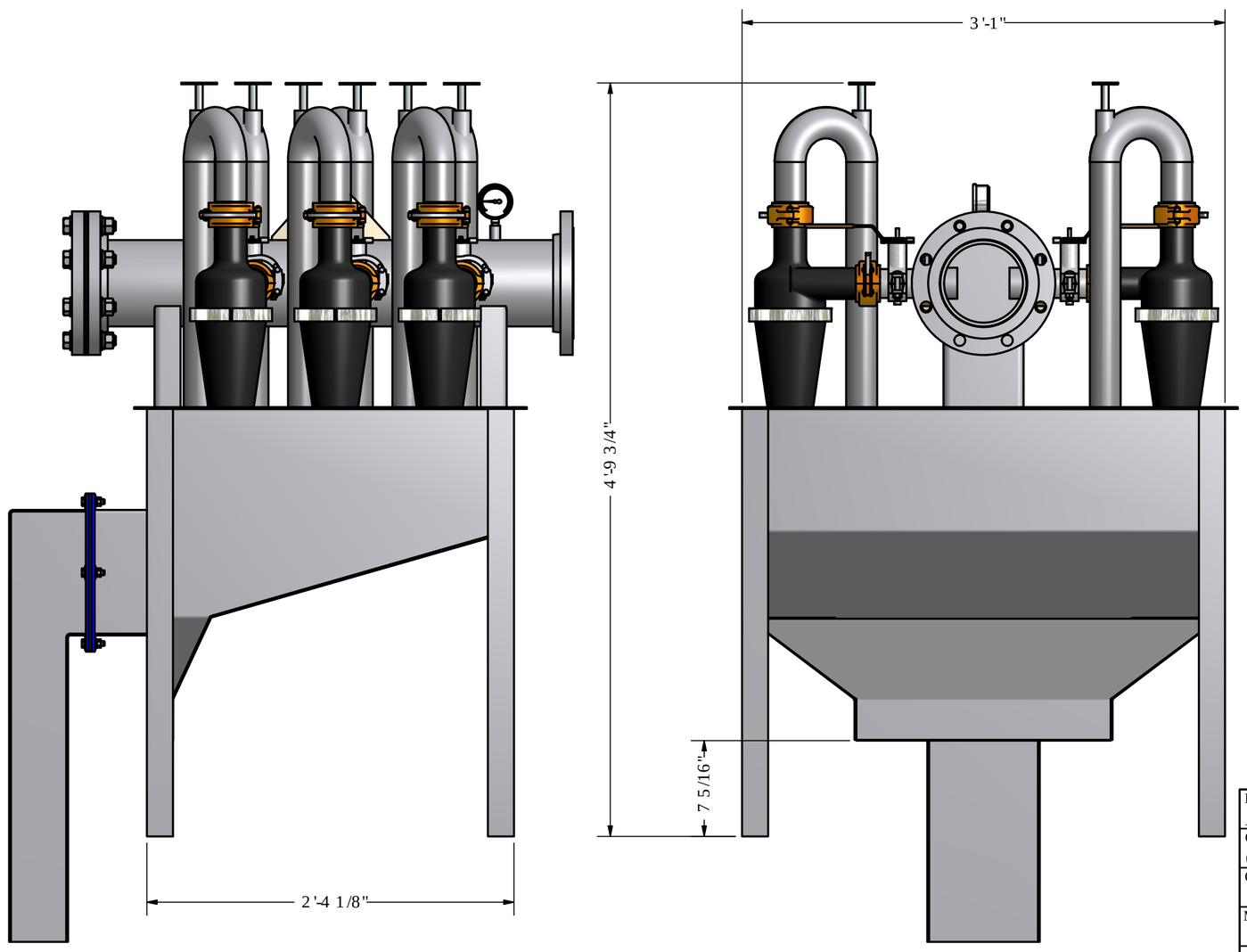

ISSUED FOR CONSTRUCTION		
DATE	JOB	APPROVED

DRAWN APLEDGER	10/29/2012	OVERALL DIMENSIONS
CHECKED COLBY HEARN		TITLE
QA		6-4 MUD CLEANER
MFG		
APPROVED CLIFF CANTLON		SIZE C / DWG NO 12-00-030 / REV 0
		SCALE / SHEET 2 OF 2